# SAGINAW CONTROL & ENGINEERING
# SCE-TEDH24VDC, PART I.D. 131327

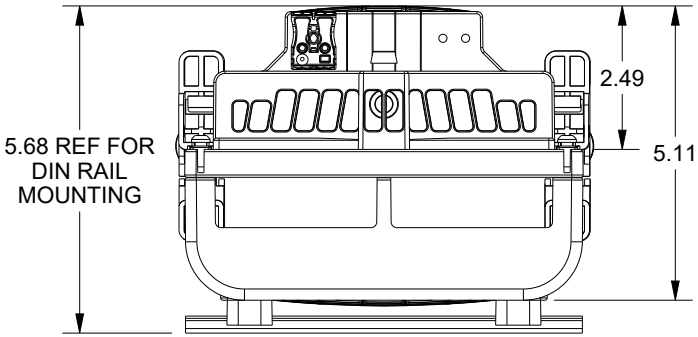


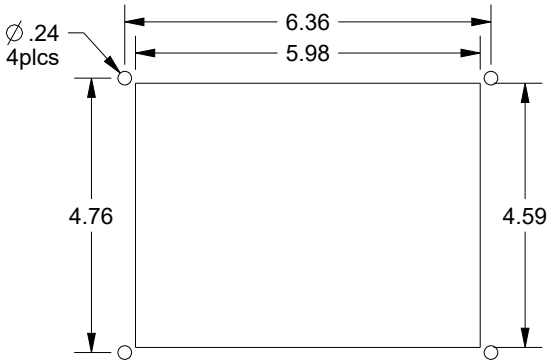


CUTOUT DETAIL FOR RECESS MOUNTING

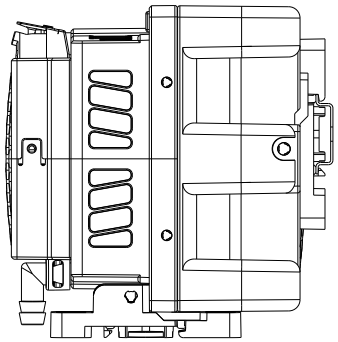

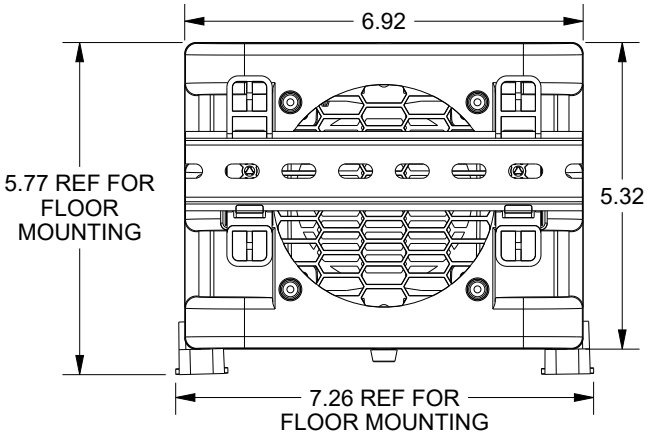


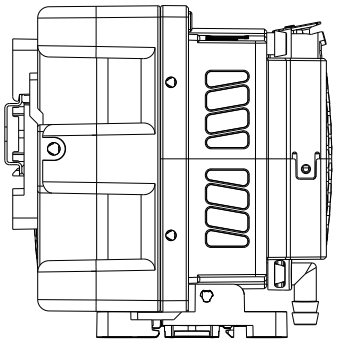

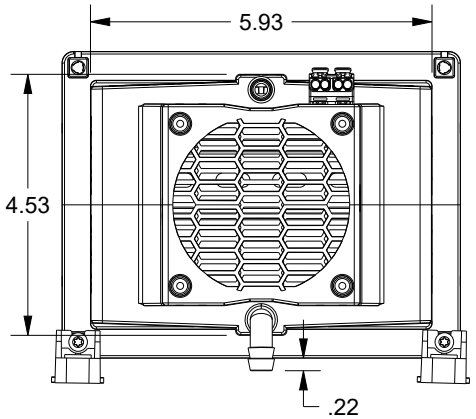


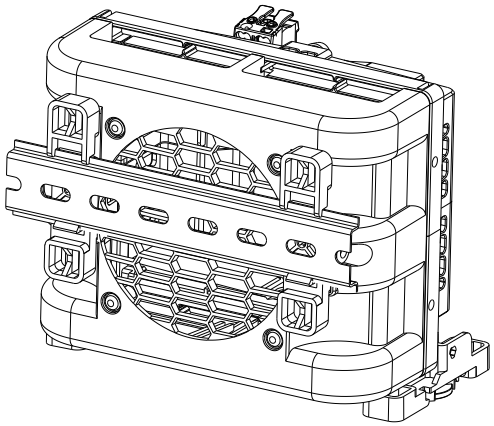

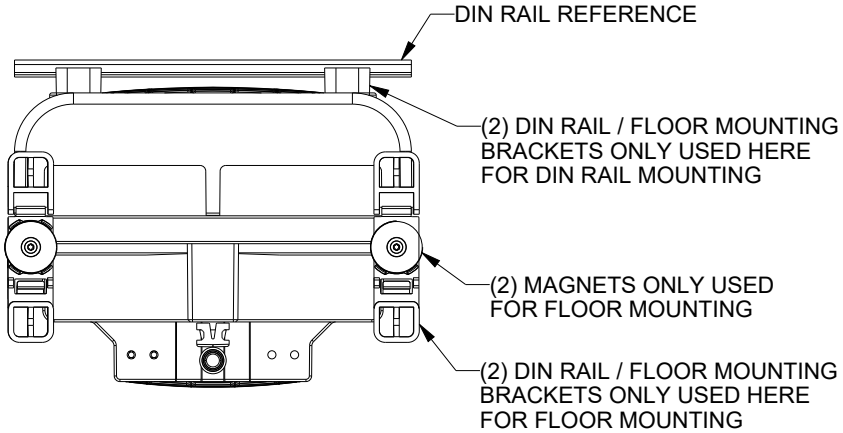


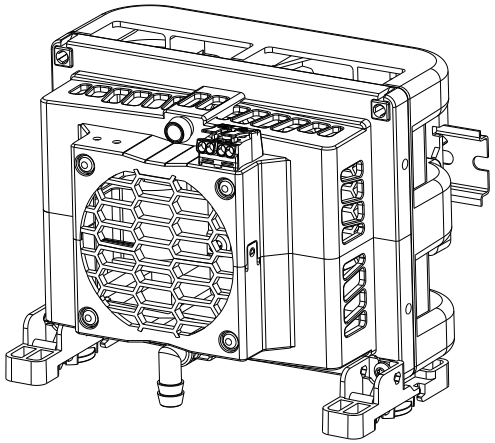

DATA SUBJECT TO CHANGE WITHOUT NOTICE