SAGINAW CONTROL & ENGINEERING
SCE-N86L7824SS

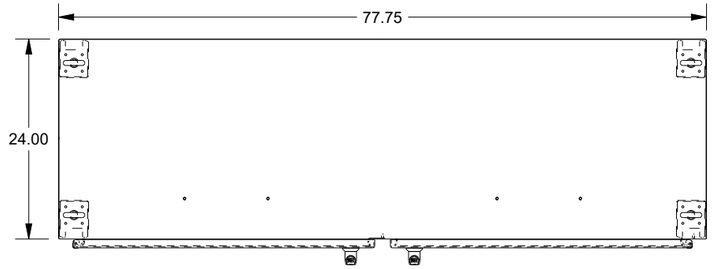

TOP VIEW

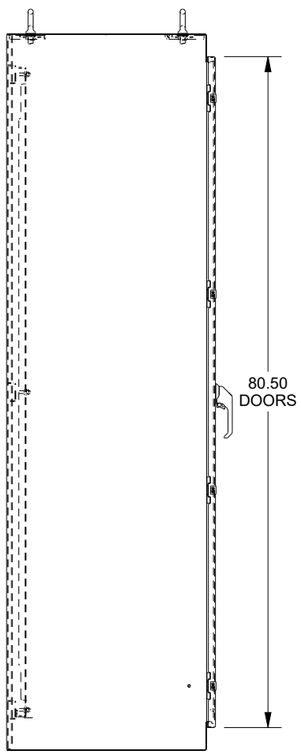

LEFT SIDE VIEW

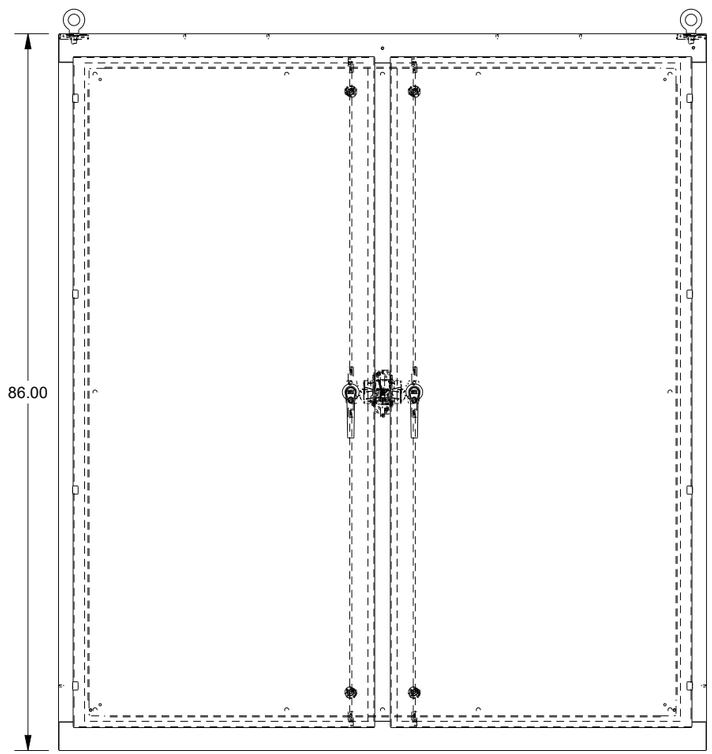

FRONT VIEW

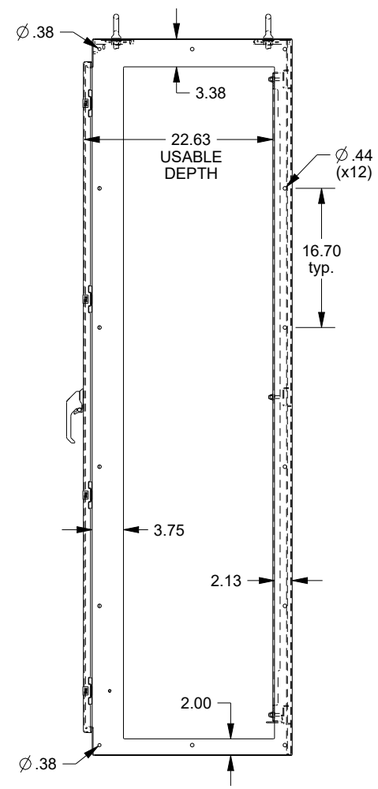

RIGHT SIDE VIEW

PROVISIONS FOR A STUD MOUNTED
78.00"H x 70.75"W SUBPANEL ON
BODY BRACES ON THE REAR WALL

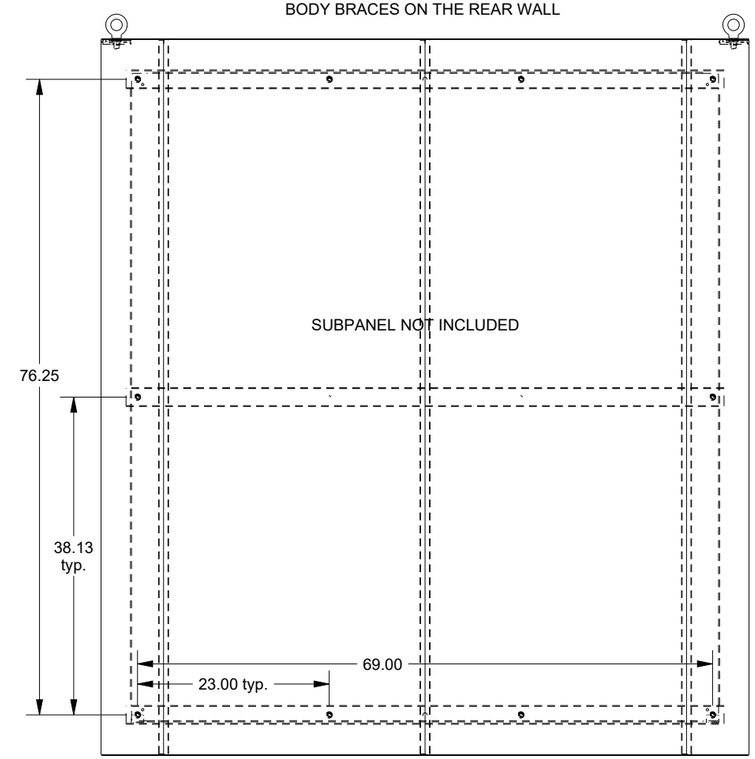

EXTERNAL REAR VIEW

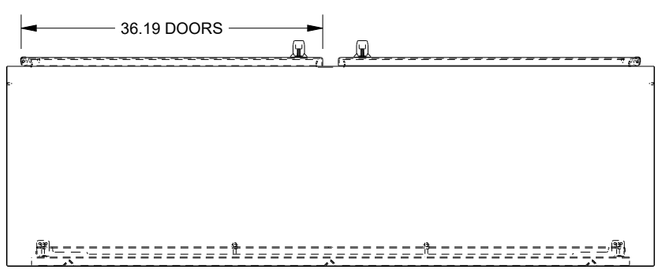

BOTTOM VIEW

DATA SUBJECT TO CHANGE WITHOUT NOTICE