SAGINAW CONTROL & ENGINEERING
SCE-N80L7818

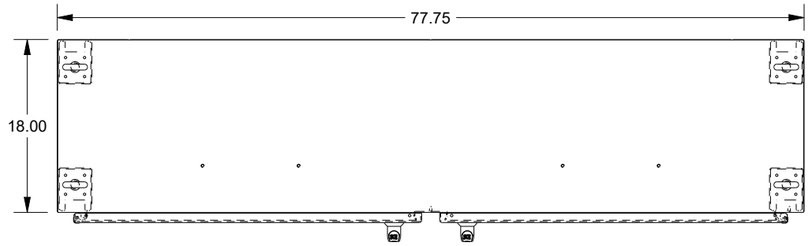

TOP VIEW

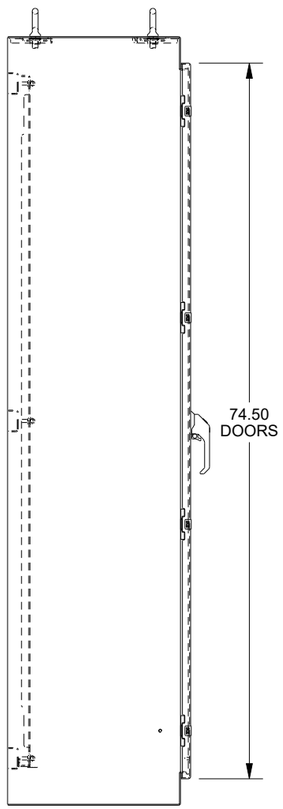

LEFT SIDE VIEW

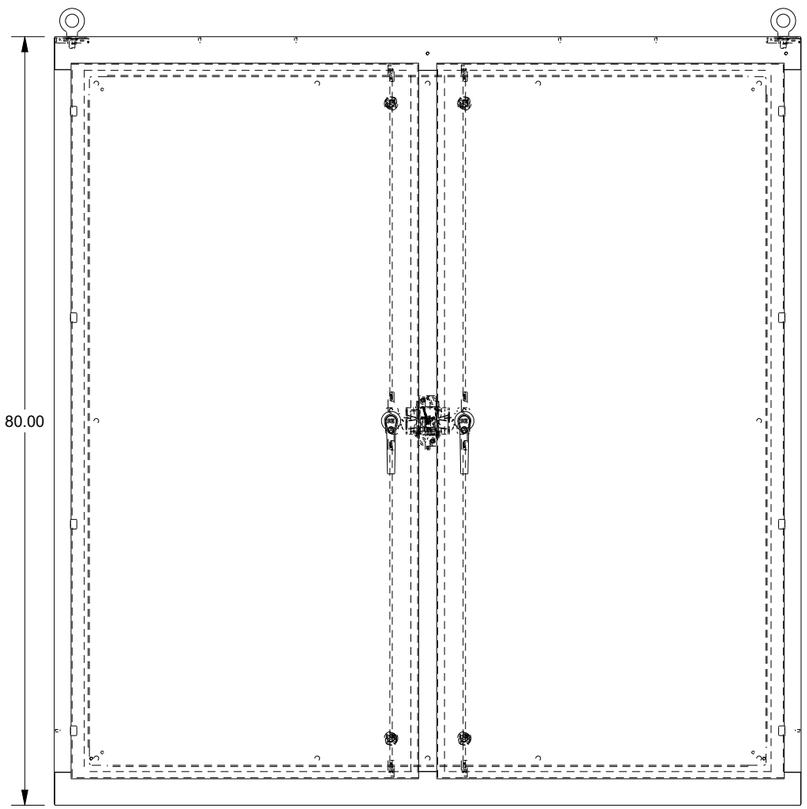

FRONT VIEW

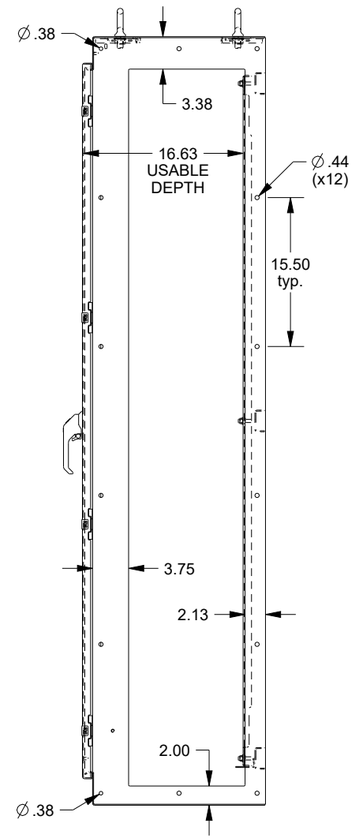

RIGHT SIDE VIEW

PROVISIONS FOR A STUD MOUNTED
72.00"H x 70.75"W SUBPANEL ON
BODY BRACES ON THE REAR WALL

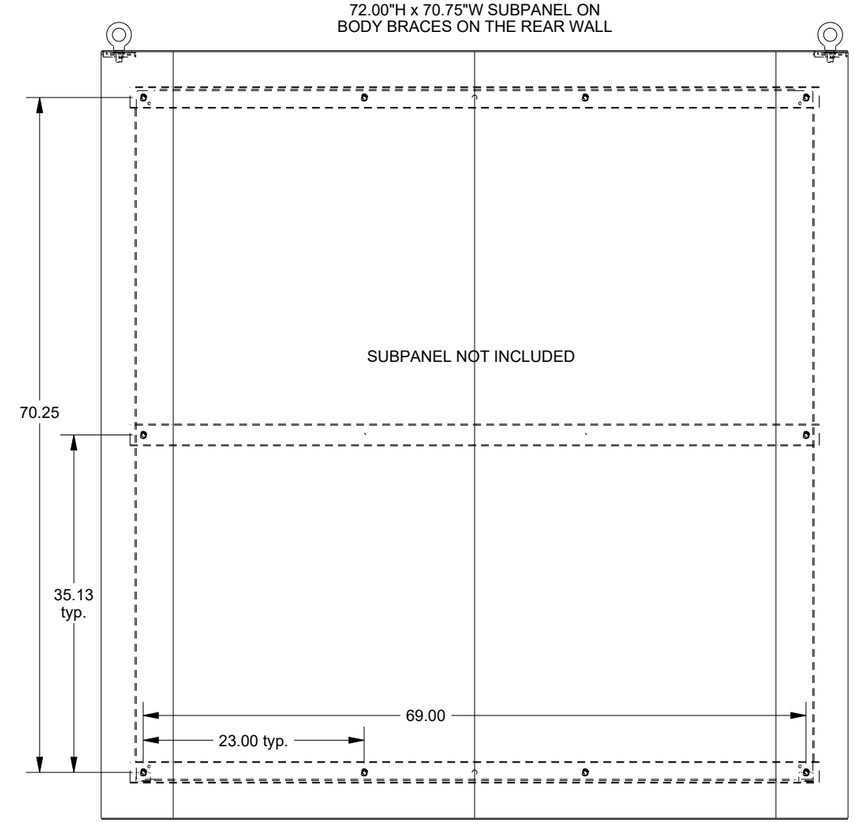

EXTERNAL REAR VIEW

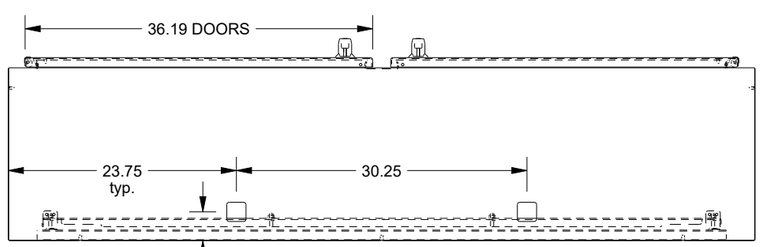

BOTTOM VIEW

WASH SYSTEM 2" SQUARE DRAIN HOLES IN THE
BOTTOM WITH UL APPROVED HOLE SEALS PROVIDED

3.00
typ.

DATA SUBJECT TO CHANGE WITHOUT NOTICE